KOHLER CO. CONFIDENTIAL INFORMATION

REV	DATE	REVISION	BY
–	4–28–11	NEW DRAWING [91304–3]	DJV
A	5–19–11	(D–6) TOP CONDUIT ENTRY AREA ADDED [91691]	KJB
B	2–9–12	(C–8) ADD DIMS 1690[66.5] & 845[33.3]	
		(C–2) REMOVE BUS LOCATIONS VIEW [CT05336]	CEK
C	3–19–14	(A–5) 7M4290 WAS 7M7290 & SEE SHEET 3 [CT75339]	SSH

INSTALLATION NOTE

IF SUBBASE FUEL TANK AND/OR SOUND HOUSING IS USED, REFER TO SUBBASE FUEL TANK ADV TO DETERMINE MOUNTING LOCATIONS.

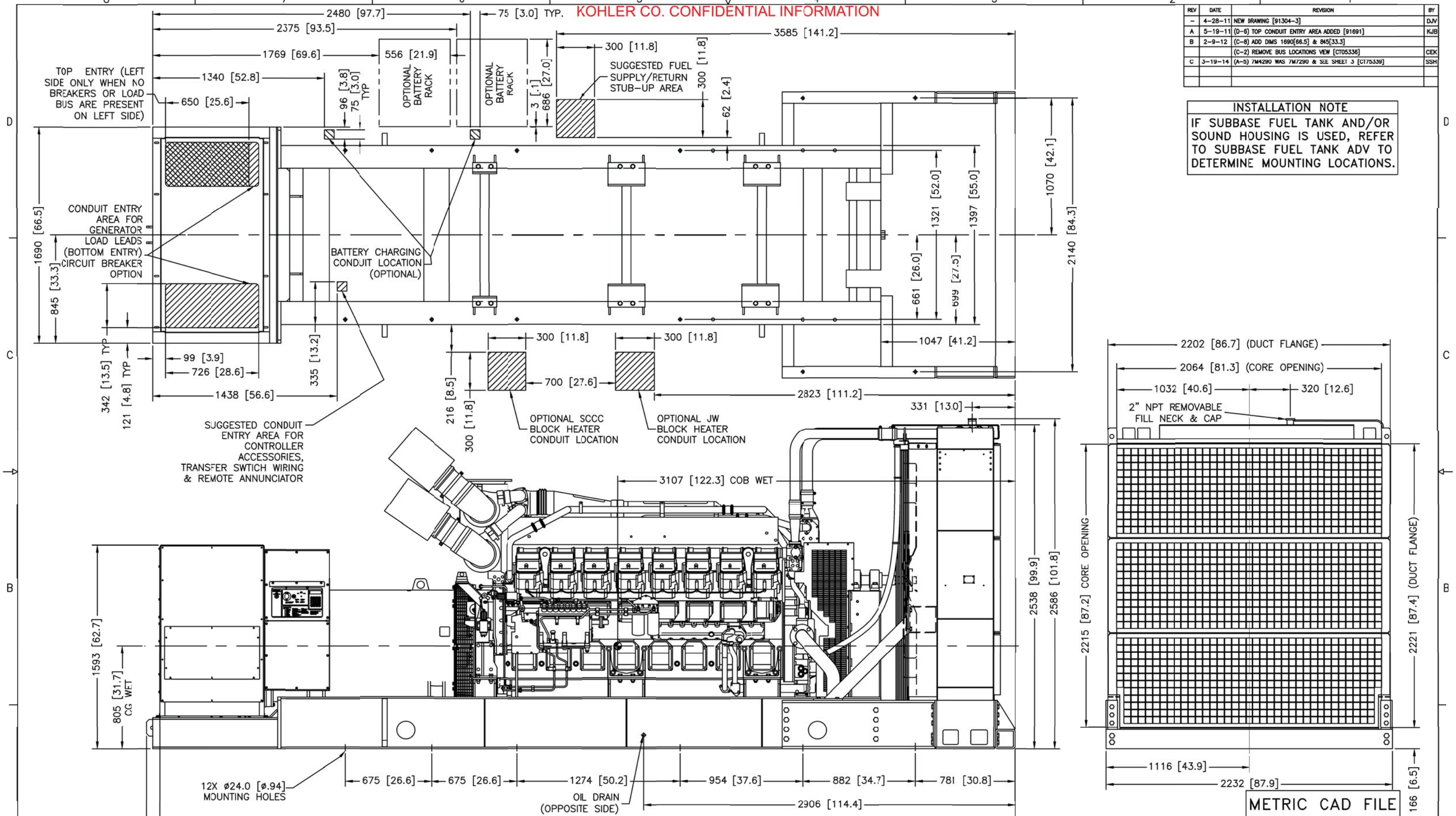

NOTE:
DIMENSIONS IN [ ] ARE INCH EQUIVALENTS
MAXIMUM WET WEIGHT OF GENSET LESS ACCESSORIES: 14334 KG [31600 LBS]
IF IEC CERTIFICATION IS REQUIRED, SEE SEISMIC ADV FOR INSTALLATION INSTRUCTIONS.

1600 MODEL 60 HZ
7M4050, 7M4052, 7M4054, 7M4174, 7M4176, 7M4290, 7M4368, 7M4370
380V, 600V, 4160V ALTERNATORS
40C & 50C COOLING SYSTEM
MITSUBISHI, TIER II

UNLESS OTHERWISE SPECIFIED –
1) DIMENSIONS ARE IN MILLIMETERS
2) TOLERANCES ARE:
X.XX ±
X.X ±
X ±
ANGLES ±
SURFACE FINISH MAX.
THIRD ANGLE PROJECTION

APPROVALS		DATE
DRAWN	DJV	4–28–11
CHECKED	DJV	4–28–11
APPROVED	WRD	4–28–11
PLOTTED DATE		

KOHLER CO.

POWER SYSTEMS, KOHLER, WI 53044 U.S.A.

THIS DRAWING, IN DESIGN AND DETAIL, IS KOHLER CO. PROPERTY AND MUST NOT BE USED EXCEPT IN CONNECTION WITH KOHLER CO. WORK. ALL RIGHTS OF DESIGN OR INVENTION ARE RESERVED.

TITLE: DIMENSION PRINT 1600REOZMD

SCALE .08 XP | CAD NO. | SHEET 1–5

DWG. NO. ADV–8178 | D

June 18, 2014 - PRODUCTION RELEASED - UNCONTROLLED WHEN PRINTED

KOHLER CO. CONFIDENTIAL INFORMATION

REV	DATE	REVISION	BY
–	4–28–11	NEW DRAWING [91304–3]	DJV
A	5–19–11	SEE SHEET 1 [91691]	KJB
B	2–9–12	SEE SHEET 1 & 3 [CT05336]	CEK
C	3–19–14	SEE SHEET 1 & 3 [CT73559]	SSH

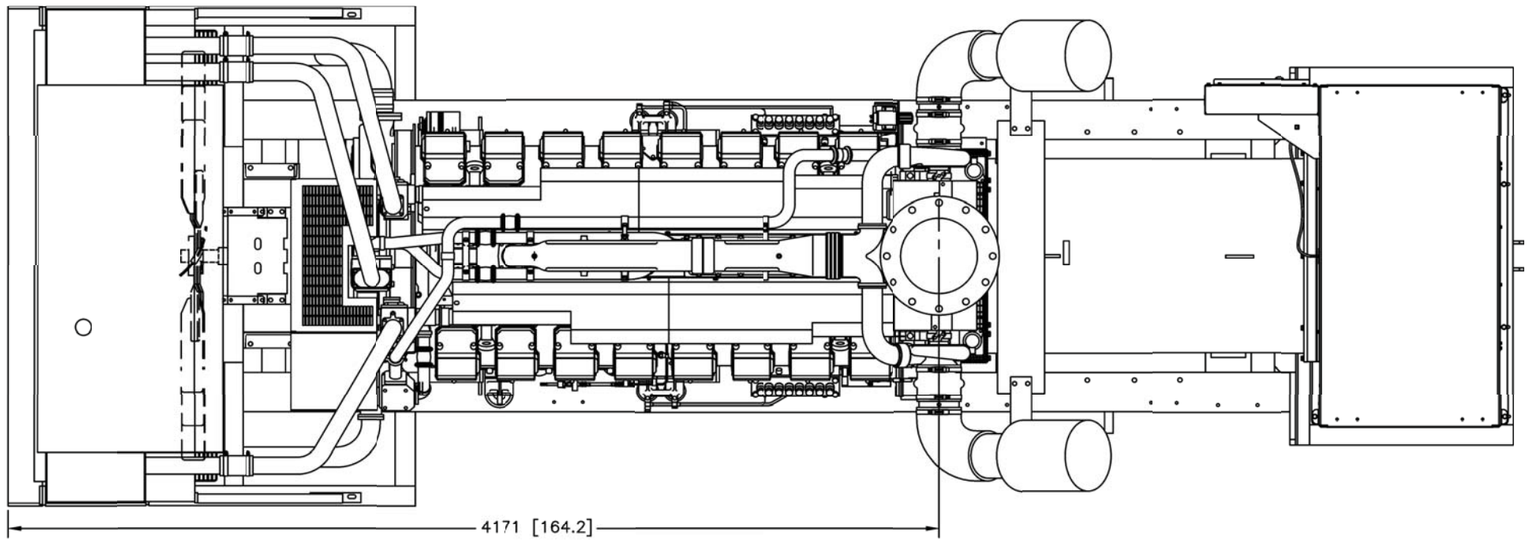

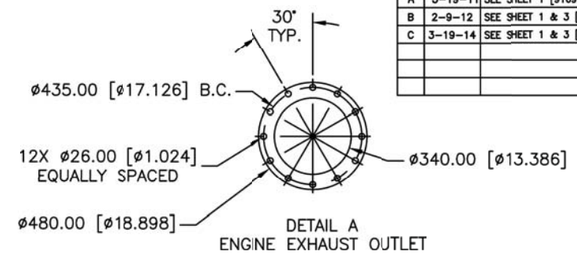

DETAIL A
ENGINE EXHAUST OUTLET

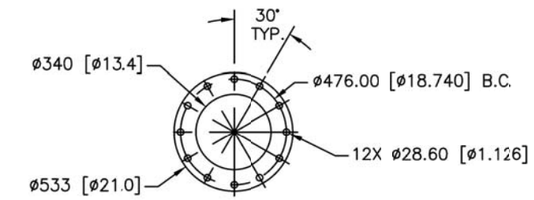

DETAIL B
OPTIONAL FLEX.
EXHAUST FLANGE

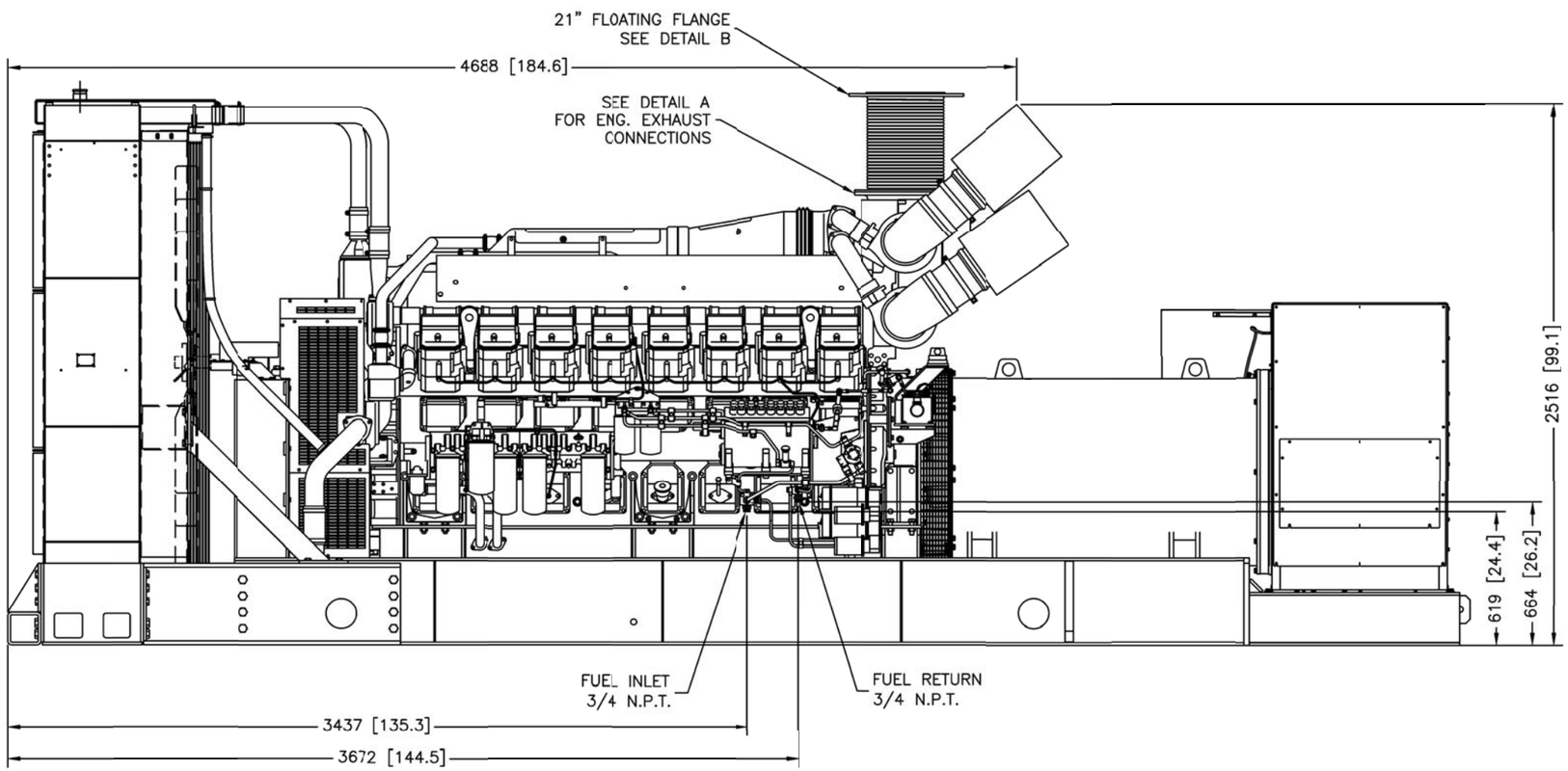

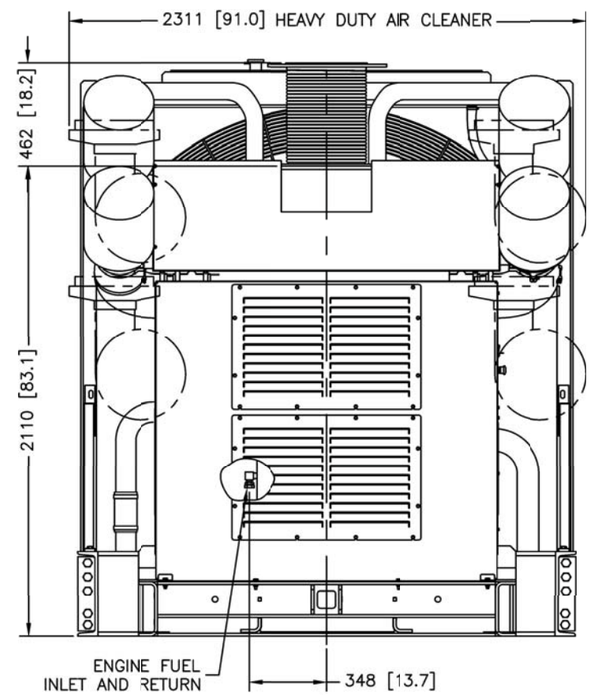

METRIC CAD FILE

NOTE:
DIMENSIONS IN [ ] ARE INCH EQUIVALENTS
IF IBC CERTIFICATION IS REQUIRED, SEE SEISMIC ADV FOR INSTALLATION INSTRUCTIONS.

1600 MODEL 60 HZ
7M4050, 7M4052, 7M4054, 7M4174, 7M4176, 7M4290, 7M4368, 7M4370
380V, 600V, 4160V ALTERNATORS
40C & 50C COOLING SYSTEM
MITSUBISHI, TIER II

UNLESS OTHERWISE SPECIFIED –
1) DIMENSIONS ARE IN MILLIMETERS
2) TOLERANCES ARE:
X.XX ±
X.X ±
X ±
ANGLES ±
SURFACE FINISH MAX.
THIRD ANGLE PROJECTION

APPROVALS		DATE
DRAWN	DJV	4–28–11
CHECKED	DJV	4–28–11
APPROVED	WRD	4–28–11
PLOTTED DATE		

KOHLER CO.
POWER SYSTEMS, KOHLER, WI 53044 U.S.A.
THIS DRAWING, IN DESIGN AND DETAIL, IS KOHLER CO. PROPERTY AND MUST NOT BE USED EXCEPT IN CONNECTION WITH KOHLER CO. WORK. ALL RIGHTS OF DESIGN OR INVENTION ARE RESERVED.

TITLE: DIMENSION PRINT 1600REOZMD
SCALE .08 XP | CAD NO. | SHEET 2–5
DWG. NO. ADV–8178 | D

June 18, 2014 - PRODUCTION RELEASED - UNCONTROLLED WHEN PRINTED

KOHLER CO. CONFIDENTIAL INFORMATION

REV	DATE	REVISION	BY
–	4–28–11	NEW DRAWING [91304–3]	DJV
A	5–19–11	SEE SHEET 1 [91691]	KJB
B	2–9–12	(C–5) ADD DIMS 2159 [85.0] & 775 [30.5]	
		(A–7) ADD GENSET WEIGHT NOTE [CT05336]	CEK
C	3–19–14	(A–6) 7M4290 WAS 7M7290 & SEE SHEET 1 [CI75339]	SSH

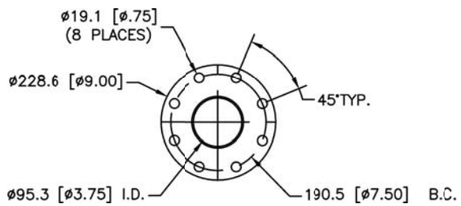

DETAIL C

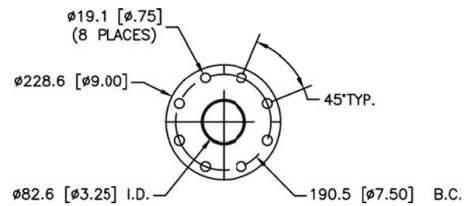

DETAIL D

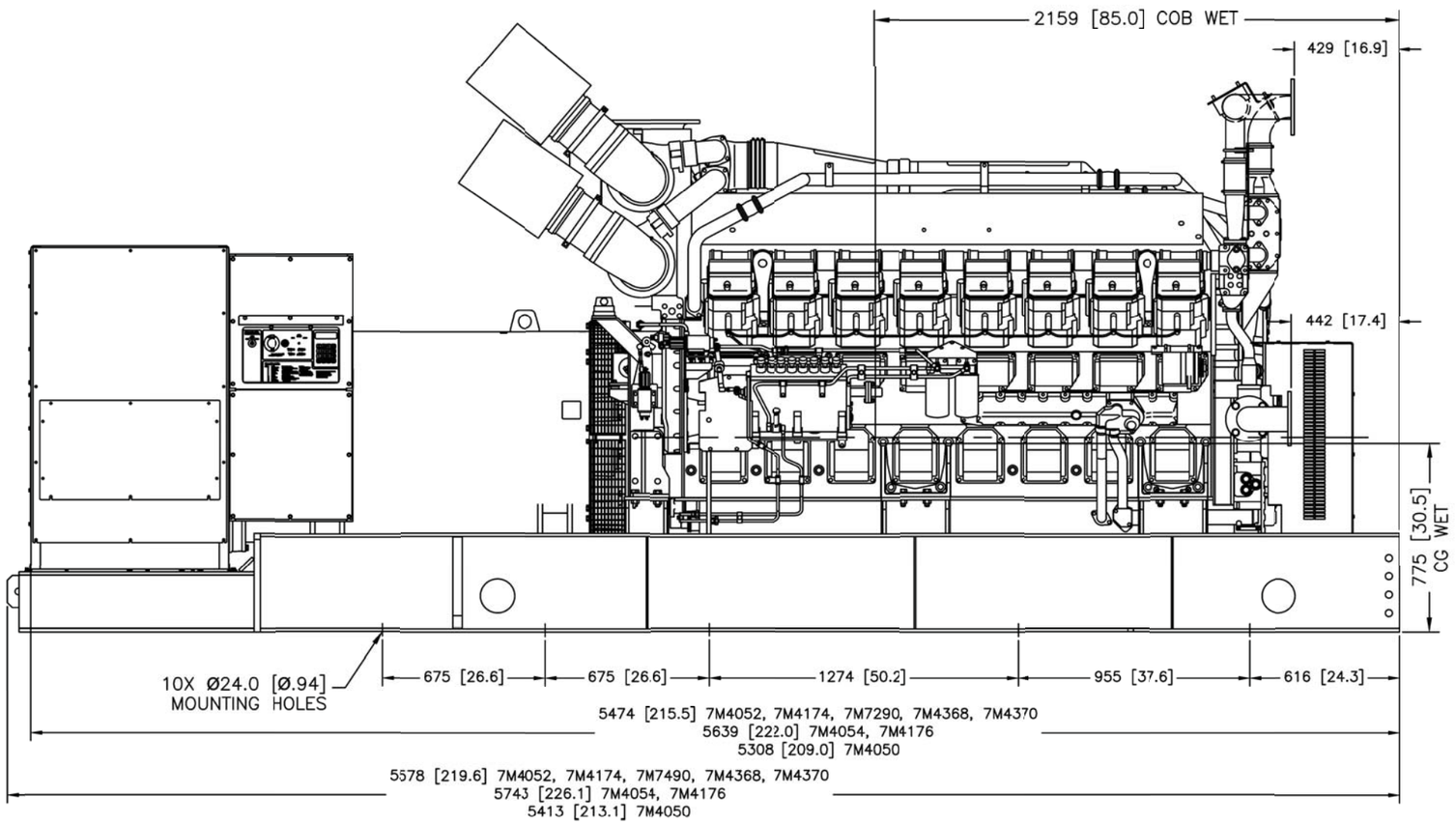

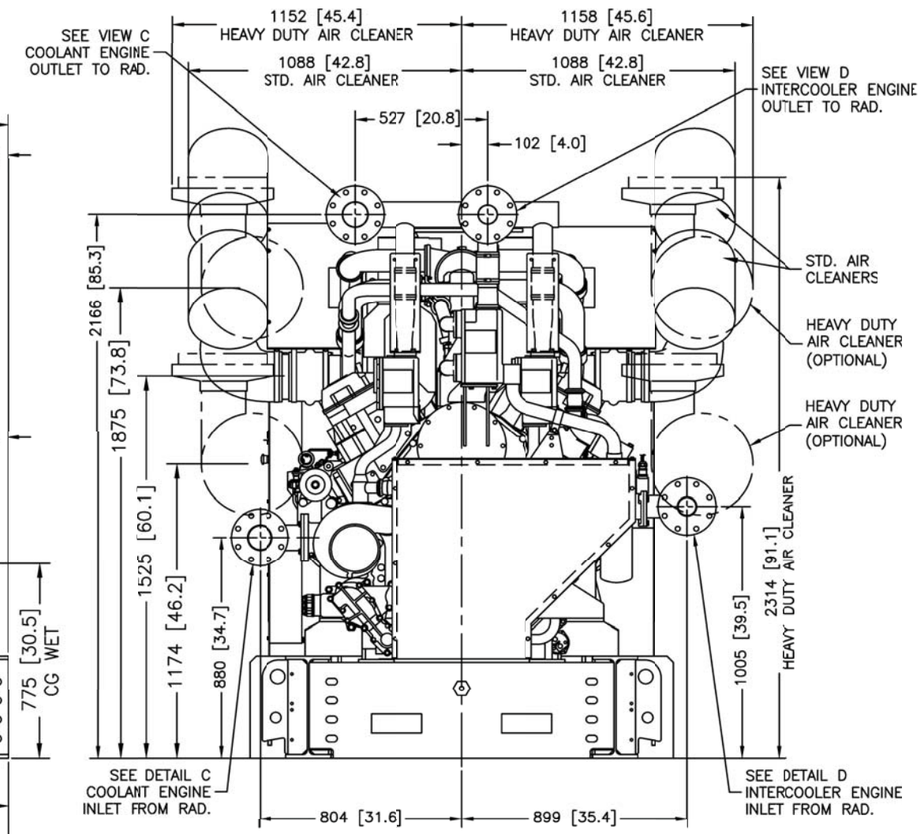

METRIC CAD FILE

NOTE:
FOR PLAN VIEW SEE SHEET 1
DIMENSIONS IN [ ] ARE INCH EQUIVALENTS
REMOTE RADIATOR GENSET MAX WEIGHT (WET): 12746 KG [28100 LBS]
IF IBC CERTIFICATION IS REQUIRED, SEE SEISMIC ADV FOR INSTALLATION INSTRUCTIONS.

1600 MODEL 60 HZ
7M4050, 7M4052, 7M4054, 7M4174, 7M4176, 7M4290, 7M4368, 7M4370
380V, 600V, 4160V ALTERNATORS
REMOTE RADIATOR
MITSUBISHI, TIER II

UNLESS OTHERWISE SPECIFIED –
1) DIMENSIONS ARE IN MILLIMETERS
2) TOLERANCES ARE:
X.XX ±
X.X ±
X ±
ANGLES ±
SURFACE FINISH MAX.
THIRD ANGLE PROJECTION

APPROVALS		DATE
DRAWN	DJV	4–28–11
CHECKED	DJV	4–28–11
APPROVED	WRD	4–28–11
PLOTTED DATE		

KOHLER CO.
POWER SYSTEMS, KOHLER, WI 53044 U.S.A.
THIS DRAWING, IN DESIGN AND DETAIL, IS KOHLER CO. PROPERTY AND MUST NOT BE USED (XCEPT IN CONNECTION WITH KOHLER CO. WORK. ALL RIGHTS OF DESIGN OR INVENTION ARE RESERVED.

TITLE: DIMENSION PRINT 1600REOZMD
SCALE: 0.1 | CAD NO. | SHEET 3–5
DWG. NO. ADV–8178 | D

June 18, 2014 - PRODUCTION RELEASED - UNCONTROLLED WHEN PRINTED

KOHLER CO. CONFIDENTIAL INFORMATION

REV	DATE	REVISION	BY
–	4–28–11	NEW DRAWING [91304–3]	DJV
A	5–19–11	SEE SHEET 1 [91691]	KJB
B	2–9–12	SEE SHEET 1 & 3 [CT05336]	CEK
C	3–19–14	SEE SHEET 1 & 3 [CT73559]	SSH

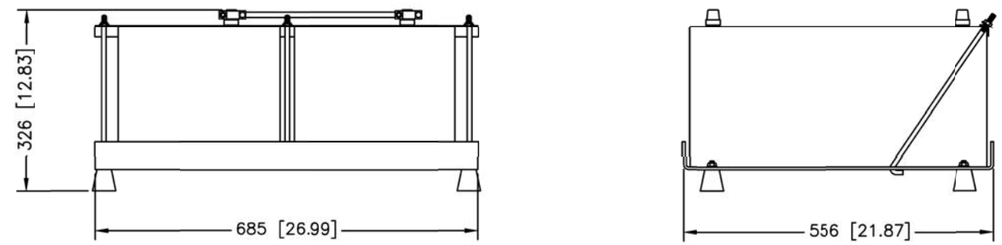

BATTERY AND BATTERY RACK (2–REQ'D)
SCALE: 2X

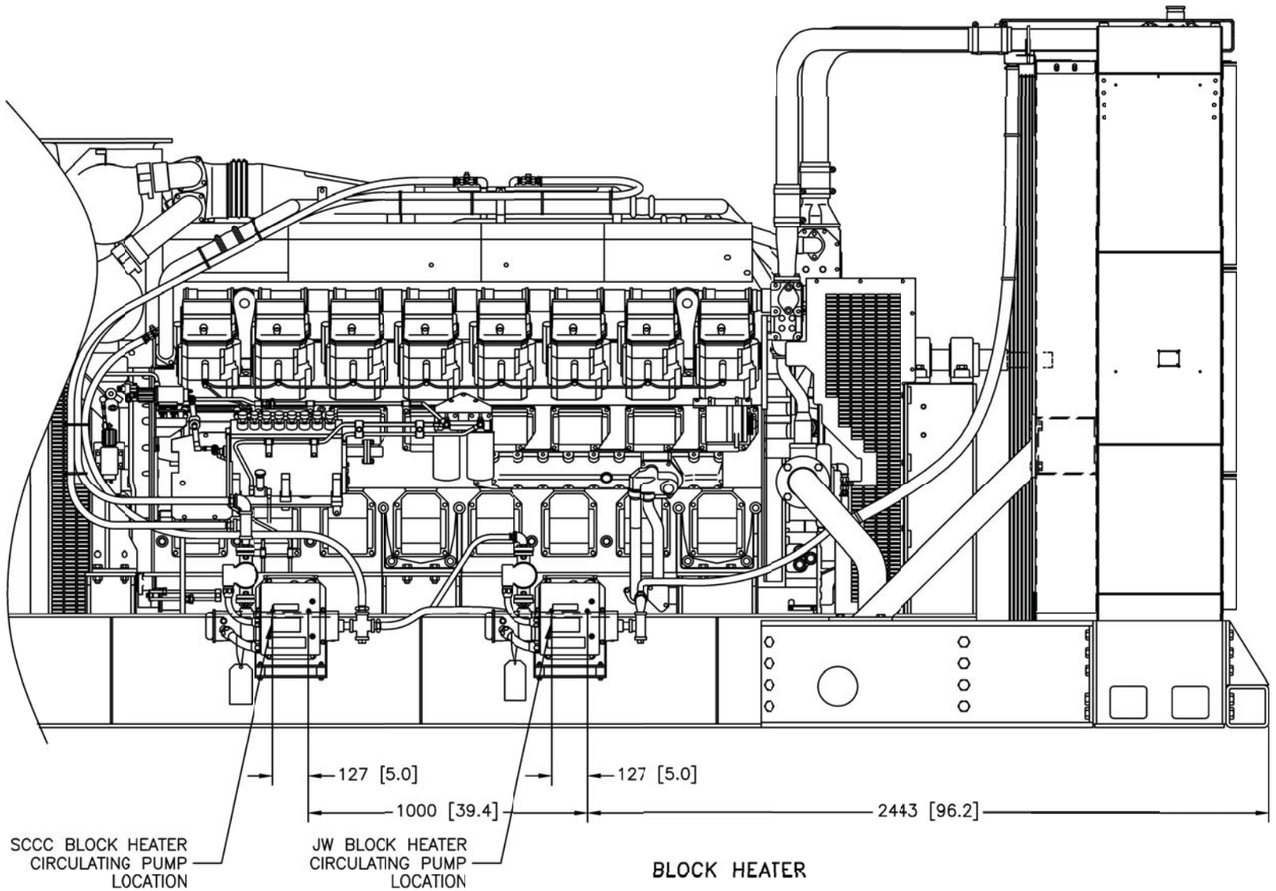

BLOCK HEATER

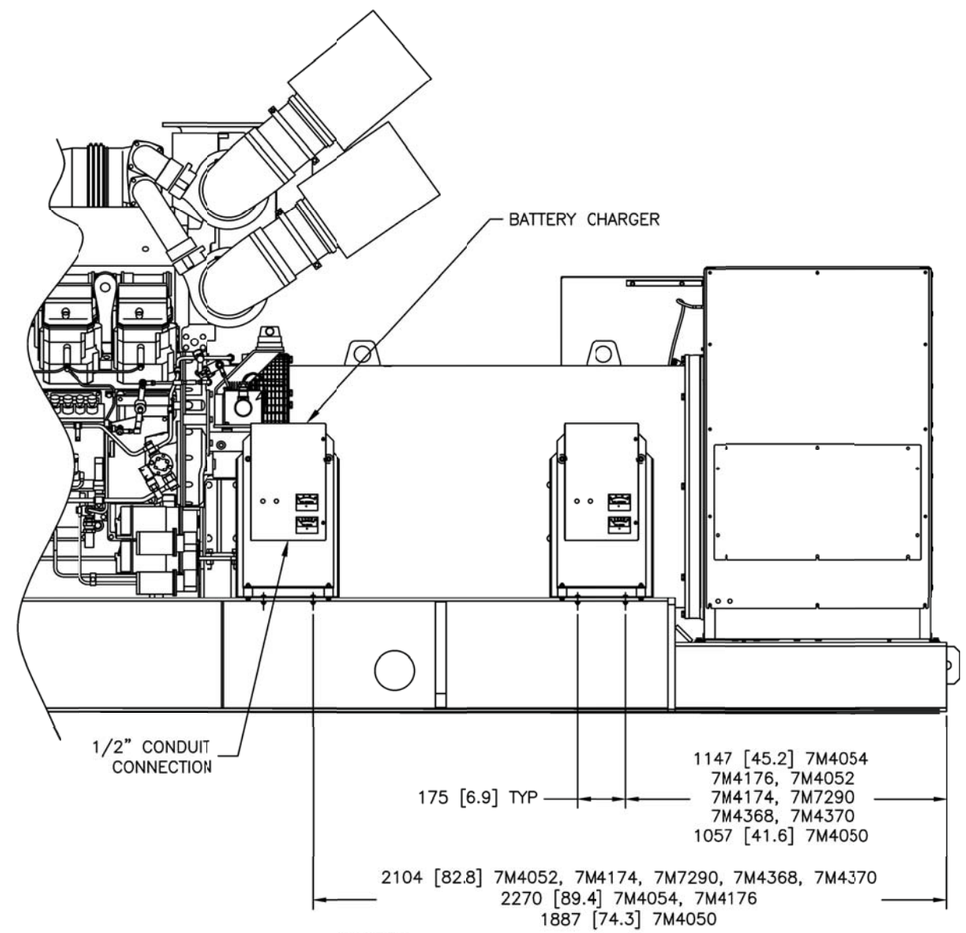

BATTERY CHARGER

METRIC CAD FILE

NOTE:
DIMENSIONS IN [ ] ARE INCH EQUIVALENTS
IF IBC CERTIFICATION IS REQUIRED, SEE SEISMIC ADV FOR INSTALLATION INSTRUCTIONS.

1600 MODEL 60 HZ
7M4050, 7M4052, 7M4054, 7M4174, 7M4176, 7M4290, 7M4368, 7M4370
380V, 600V, 4160V ALTERNATORS
40C & 50C COOLING SYSTEM
MITSUBISHI, TIER II

UNLESS OTHERWISE SPECIFIED –
1) DIMENSIONS ARE IN MILLIMETERS
2) TOLERANCES ARE:
X.XX ±
X.X ±
X ±
ANGLES ±
SURFACE FINISH MAX.
THIRD ANGLE PROJECTION

APPROVALS		DATE
DRAWN	DJV	4–28–11
CHECKED	DJV	4–28–11
APPROVED	WRD	4–28–11
PLOTTED DATE		

KOHLER CO.
POWER SYSTEMS, KOHLER, WI 53044 U.S.A.
THIS DRAWING, IN DESIGN AND DETAIL, IS KOHLER CO. PROPERTY AND MUST NOT BE USED EXCEPT IN CONNECTION WITH KOHLER CO. WORK. ALL RIGHTS OF DESIGN OR INVENTION ARE RESERVED.

TITLE DIMENSION PRINT 1600REOZMD
SCALE .08 XP | CAD NO. | SHEET 4–5
DWG. NO. ADV–8178 | D

June 18, 2014 - PRODUCTION RELEASED - UNCONTROLLED WHEN PRINTED

KOHLER CO. CONFIDENTIAL INFORMATION

REV	DATE	REVISION	BY
–	4–28–11	NEW DRAWING [91304–3]	DJV
A	5–19–11	SEE SHEET 1 [91691]	KJB
B	2–9–12	SEE SHEET 1 & 3 [CT05336]	CEK
C	3–19–14	SEE SHEET 1 & 3 [CT73559]	SSH

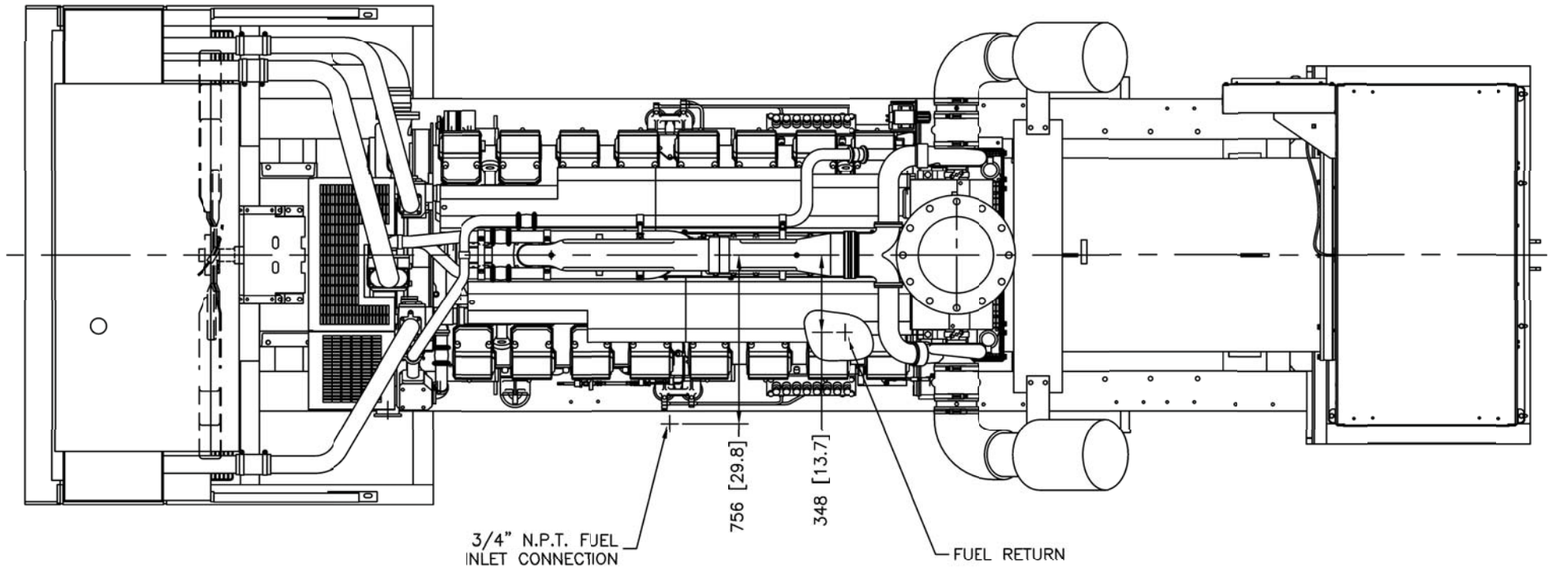

OPTIONAL FUEL INLET AND RETURN LOCATIONS

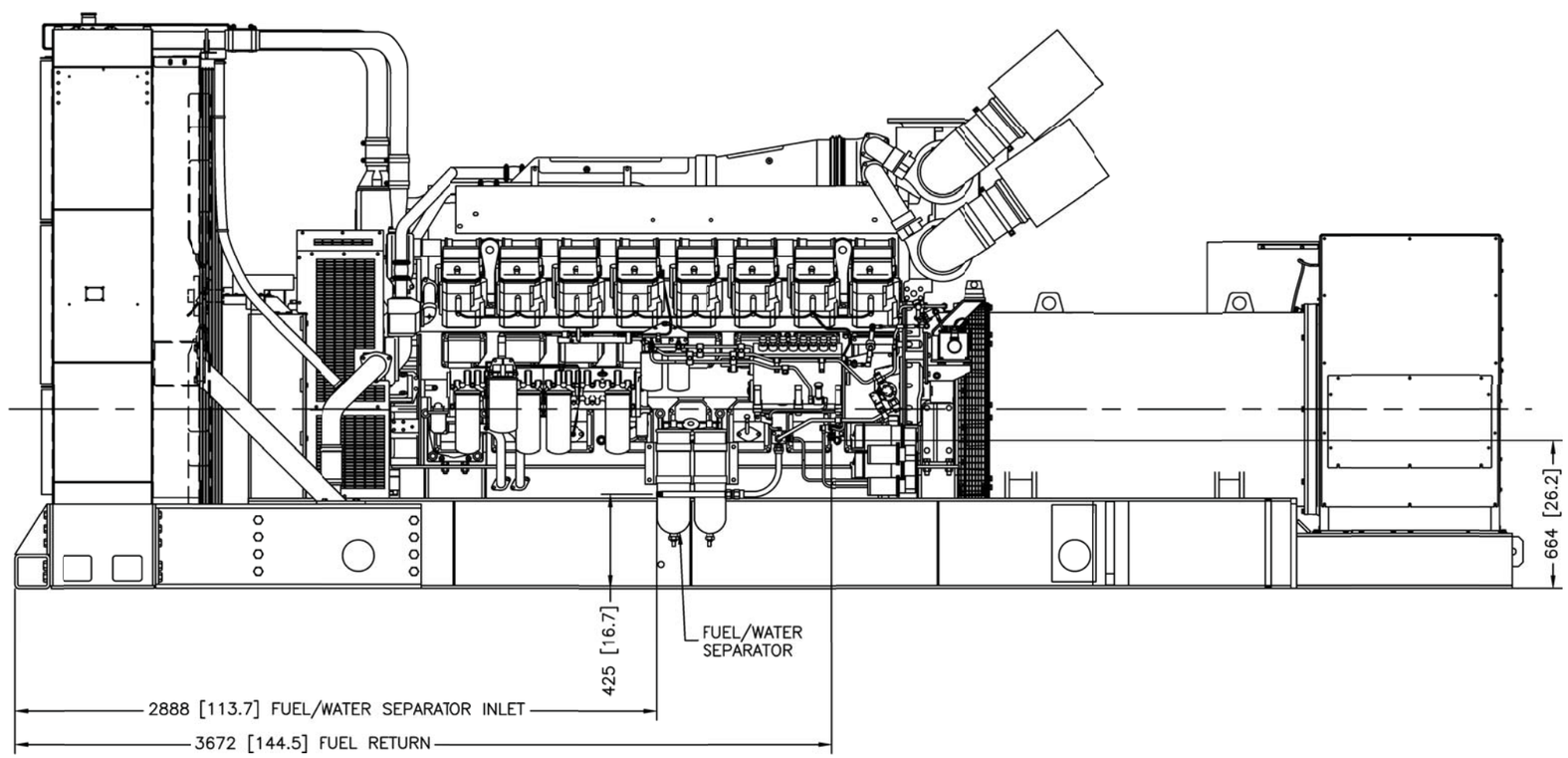

FUEL AND WATER SEPARATOR

METRIC CAD FILE

NOTE:
DIMENSIONS IN [ ] ARE INCH EQUIVALENTS
IF IBC CERTIFICATION IS REQUIRED, SEE SEISMIC ADV FOR INSTALLATION INSTRUCTIONS.

1600 MODEL 60 HZ
7M4050, 7M4052, 7M4054, 7M4174, 7M4176, 7M4290, 7M4368, 7M4370
380V, 600V, 4160V ALTERNATORS
40C & 50C COOLING SYSTEM
MITSUBISHI, TIER II

UNLESS OTHERWISE SPECIFIED –
1) DIMENSIONS ARE IN MILLIMETERS
2) TOLERANCES ARE:
X.XX ±
X.X ±
X ±
ANGLES ±
SURFACE FINISH 63 MAX.
THIRD ANGLE PROJECTION

APPROVALS		DATE
DRAWN	DJV	4–28–11
CHECKED	DJV	4–28–11
APPROVED	WRD	4–28–11
PLOTTED DATE		

KOHLER CO.
POWER SYSTEMS, KOHLER, WI 53044 U.S.A.
THIS DRAWING, IN DESIGN AND DETAIL, IS KOHLER CO. PROPERTY AND MUST NOT BE USED EXCEPT IN CONNECTION WITH KOHLER CO. WORK. ALL RIGHTS OF DESIGN OR INVENTION ARE RESERVED.

TITLE: DIMENSION PRINT 1600REOZMD
SCALE .08 XP | CAD NO. | SHEET 5–5
DWG. NO. ADV–8178 | D

June 18, 2014 - PRODUCTION RELEASED - UNCONTROLLED WHEN PRINTED