GeneratorJoe
4016 Quartz Drive
Santa Rosa, CA 95405
Phone: 707 539-9003
Fax: 707 539-5212
Email: sales@generatorjoe.NET
Web www.generatorjoe.NET

ISS	ALTERATIONS	DATE

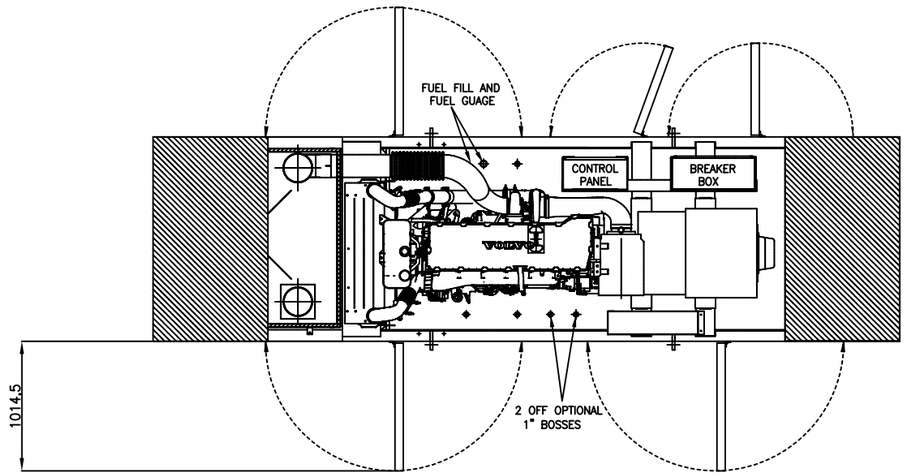

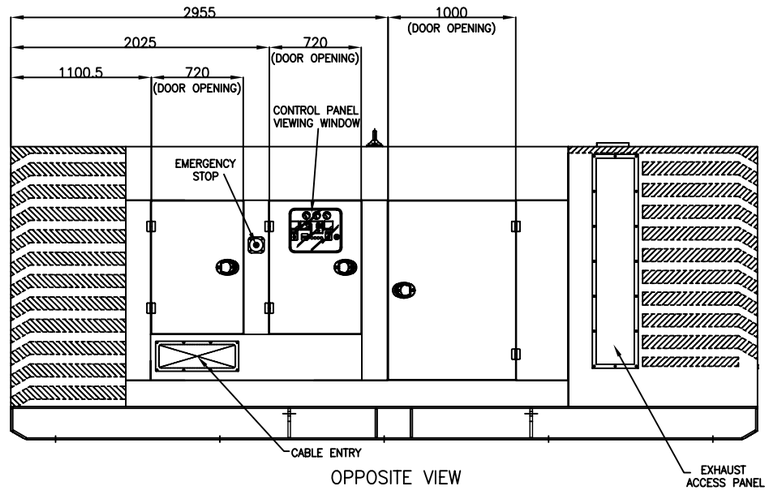

OPPOSITE VIEW

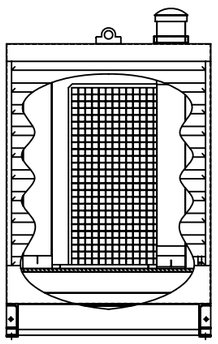

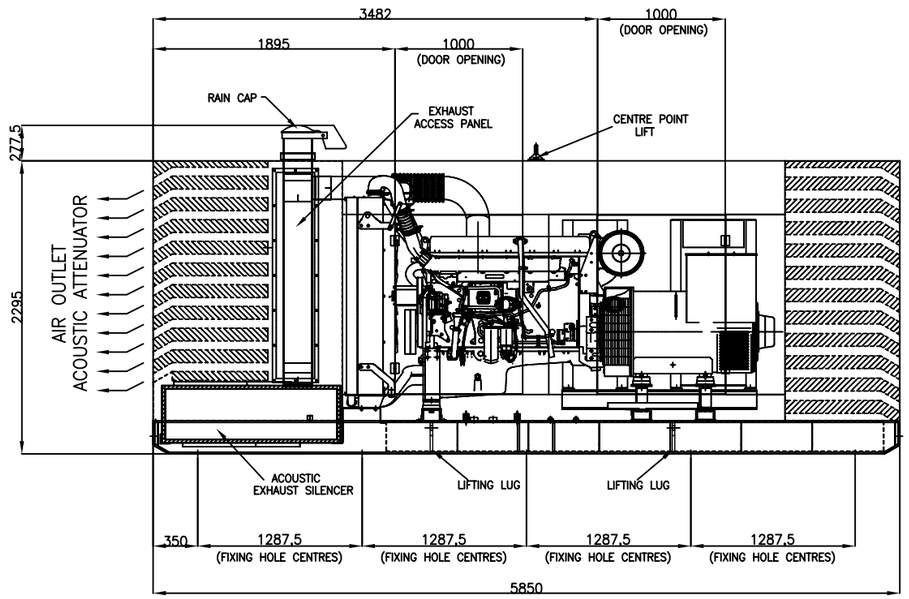

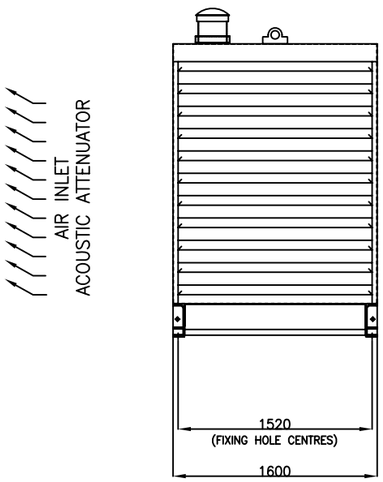

FOR INDIVIDUAL GEN-SET MODEL TYPES SEE BROADCROWN LITERATURE.

ENGINE TYPE: TAD 1642 GE
ALTERNATOR: UCI 544
(UCI544E ILLUSTRATED)

FUEL CAPACITY: 1250 LITRES (1165 USEABLE)

SHIPPING WEIGHT
(WITH OIL): 6985 Kg's

WET WEIGHT
50/50 GLYCOL & FUEL: 8120 Kg's

OIL CAPACITY: 48 LITRES
COOLING CAPACITY: 60 LITRES

GENERATOR IS TO BE PLACED ON A FLAT FLOOR OR CONCRETE BASE.

PLEASE NOTE WEIGHTS MAY VARY DEPENDING ON ALTERNATOR COMBINATION.

NOTES

TOLERANCES:
BETWEEN HOLE CENTRES & HOLE CENTRE TO EDGE (ON FLAT) ± 0.2

HOLE CENTRES TO BEND AND EDGES TO BEND ± 0.5

ACROSS EACH BEND ± 0.5

FABRICATION ± 1.0

HOLE DIAMETERS AND SLOT WIDTHS +0.1, -0.0

ANGULAR ± 0.5°

THIRD ANGLE PROJECTION
DO NOT SCALE, IF IN DOUBT ASK

DISTRIBUTION

MASTER	FABRICATOR

TITLE:	CANOPY 6 GENERAL ARRANGEMENT		
CLIENT:			
SITE:			
W.O. No.:		ENGINEER:	P.RUTTER
TYPE:	VOLVO	CHECKED:	
SCALE:	NTS	DATE:	
		TOTAL No. OF SHEETS:	1

DRAWING NO. VGA002 ISSUE A

BROADCROWN