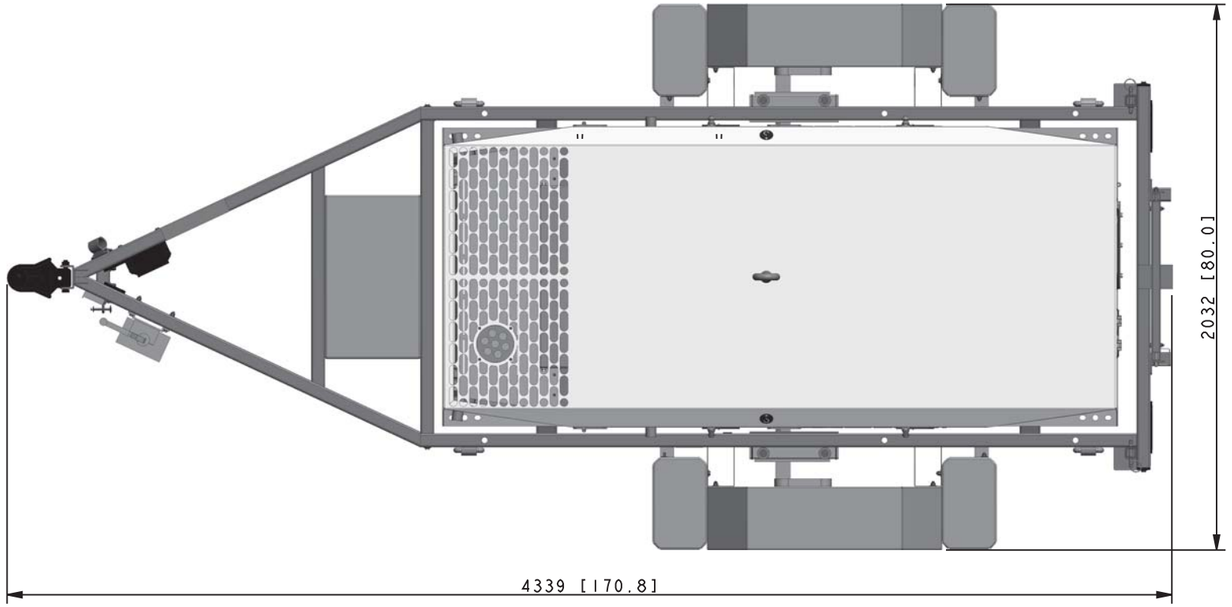

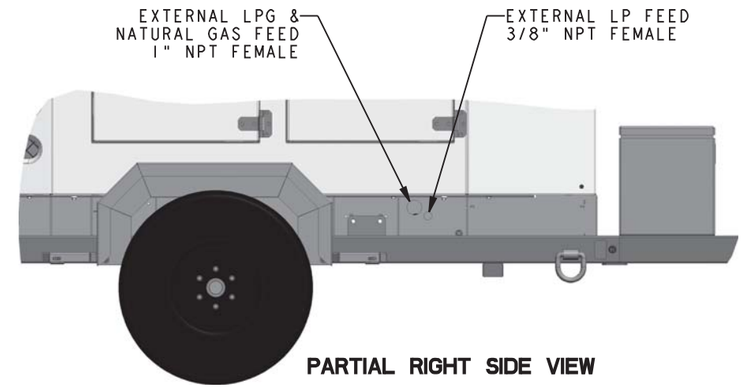

PARTIAL RIGHT SIDE VIEW

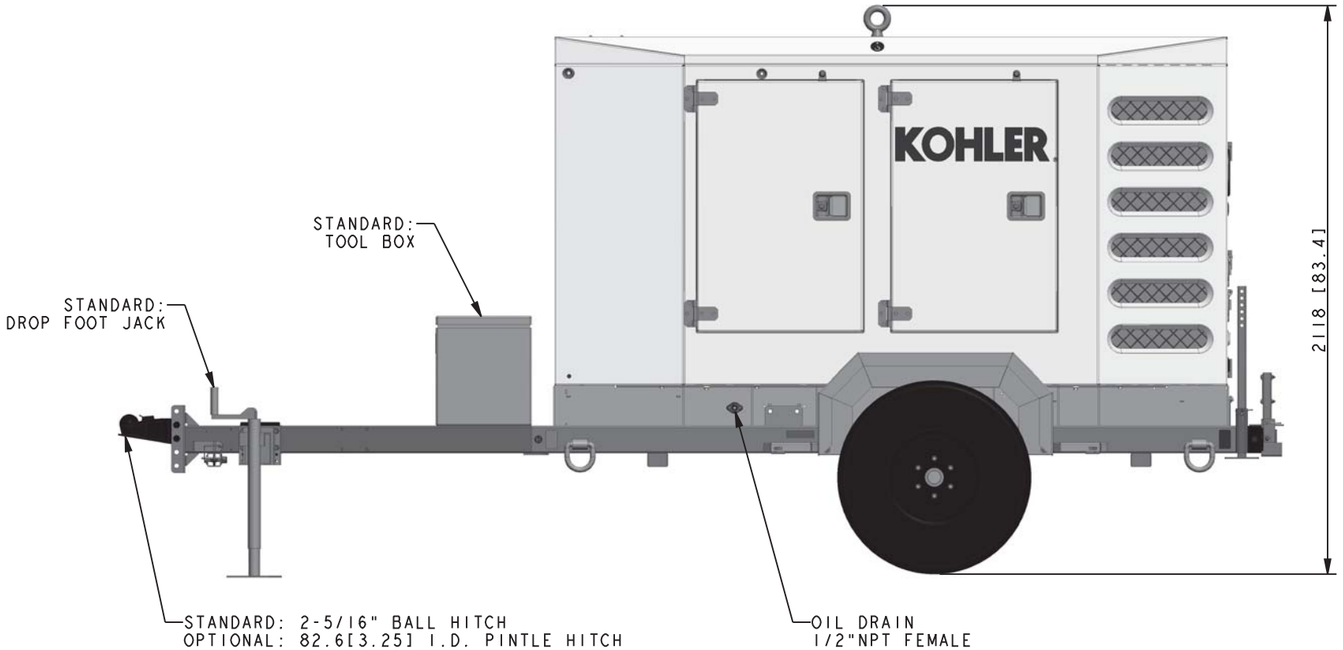

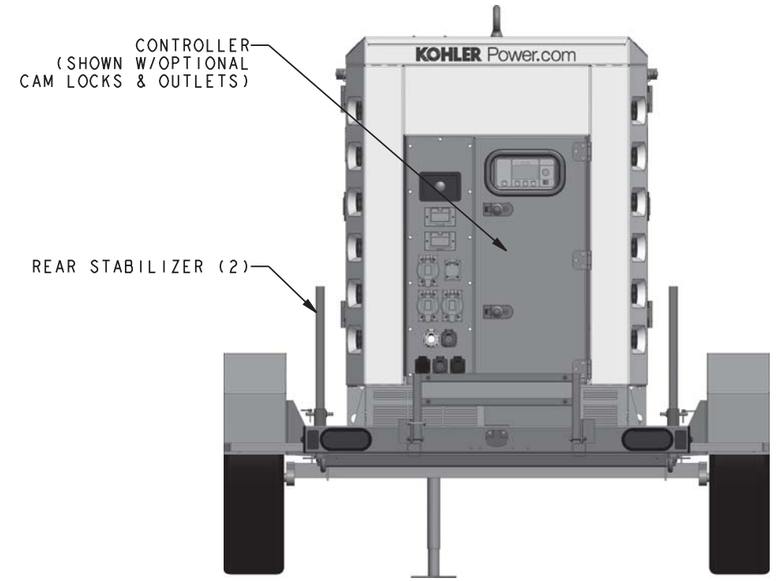

MODEL	GENSET WEIGHT (WET)
50REZGT	1657 Kg [3653 LBS]
70REZGT	1771 Kg [3904 LBS]

REV	DATE	ON COMPOSITE DWGS, SEE PART NO. FOR REVISION LEVEL	BY
-	4-25-14	NEW DRAWING [CT76976]	AWK

UNLESS OTHERWISE SPECIFIED - 1) DIMENSIONS ARE IN MILLIMETERS 2) TOLERANCES ARE:
X.XX ± 0.25
X.X ± 1.0
X ± 1.5
ANGLES ± 0° 30'
SURFACE FINISH MAX.
THIRD ANGLE PROJECTION

APPROVALS		DATE
DRAWN	AWK	4-25-14
CHECKED	AWK	4-25-14
APPROVED	PEH	4-25-14

KOHLER CO. METRIC PRO-E
POWER SYSTEMS, KOHLER, WI 53044 U.S.A.

THIS DRAWING IN DESIGN AND DETAIL IS KOHLER CO. PROPERTY AND MUST NOT BE USED EXCEPT IN CONNECTION WITH KOHLER CO. WORK. ALL RIGHTS OF DESIGN OR INVENTION ARE RESERVED.

TITLE
DIMENSIONED PRINT

SCALE 0.09 | CAD NO. | SHEET 1 of 2
DWG NO. ADV-8634 | D

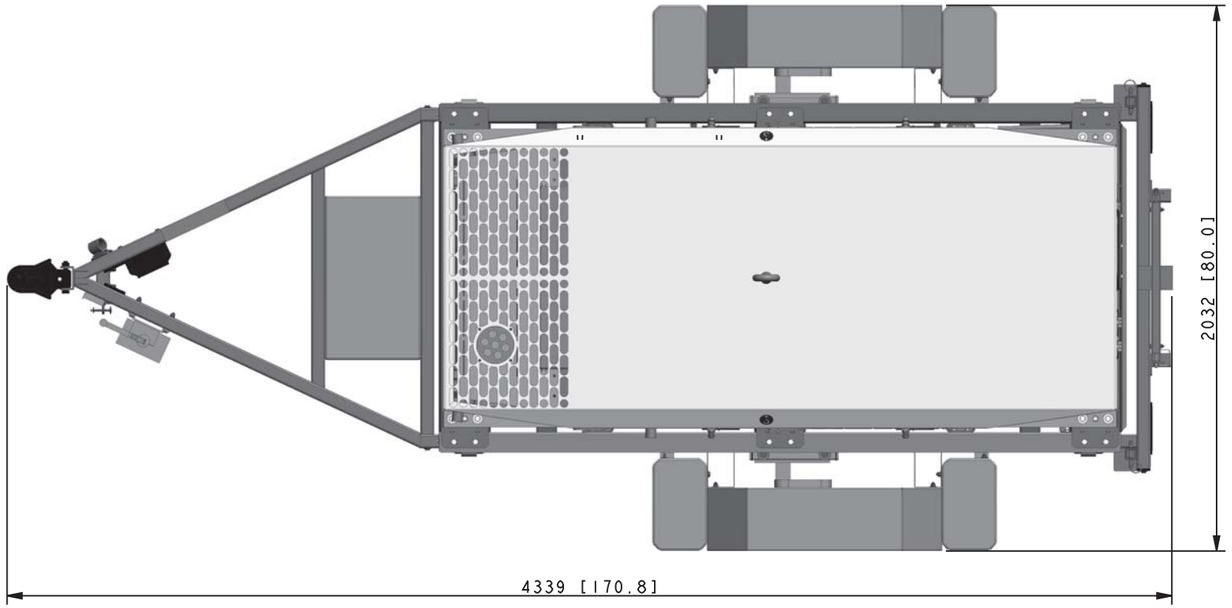

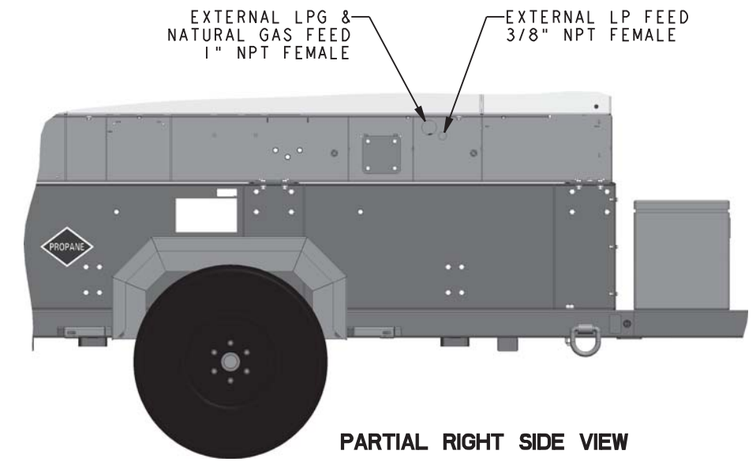

PARTIAL RIGHT SIDE VIEW

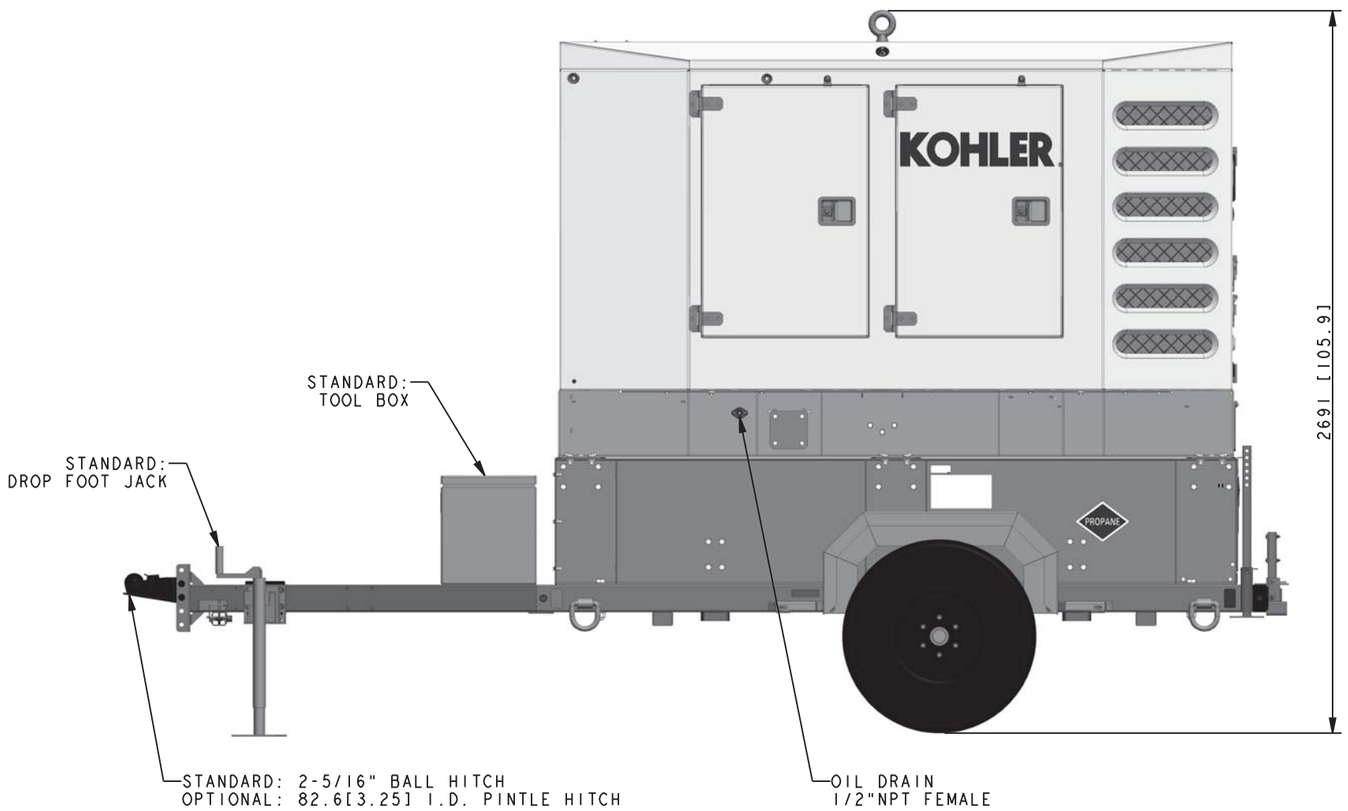

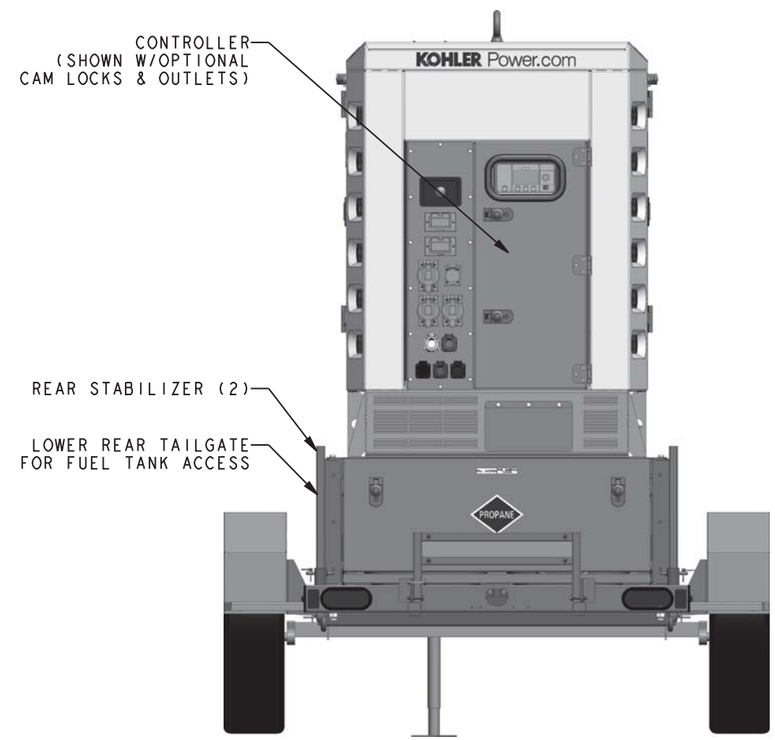

MODEL	GENSET WEIGHT (WET)
50REZGT	2474 Kg [5454 LBS]
70REZGT	2588 Kg [5706 LBS]

REV	DATE	ON COMPOSITE DWGS, SEE PART NO. FOR REVISION LEVEL	BY
-	4-25-14	NEW DRAWING [CT76976]	AWK

UNLESS OTHERWISE SPECIFIED.-
1) DIMENSIONS ARE IN MILLIMETERS
2) TOLERANCES ARE:
X.XX ± 0.25
X.X ± 1.0
X ± 1.5
ANGLES ± 0° 30'
SURFACE FINISH MAX.
THIRD ANGLE PROJECTION

APPROVALS		DATE
DRAWN	AWK	4-25-14
CHECKED	AWK	4-25-14
APPROVED	PEH	4-25-14

KOHLER CO. METRIC | PRO-E

POWER SYSTEMS, KOHLER, WI 53044 U.S.A.

THIS DRAWING IN DESIGN AND DETAIL IS KOHLER CO. PROPERTY AND MUST NOT BE USED EXCEPT IN CONNECTION WITH KOHLER CO. WORK. ALL RIGHTS OF DESIGN OR INVENTION ARE RESERVED.

TITLE
DIMENSIONED PRINT

SCALE 0.09 | CAD NO. | SHEET 2 of 2

DWG NO. **ADV-8634** | D