# COMPOSITE OUTLINE FOR ASCO (H150, H300, H386) 1200 AMPERE TRANSFER SWITCHES

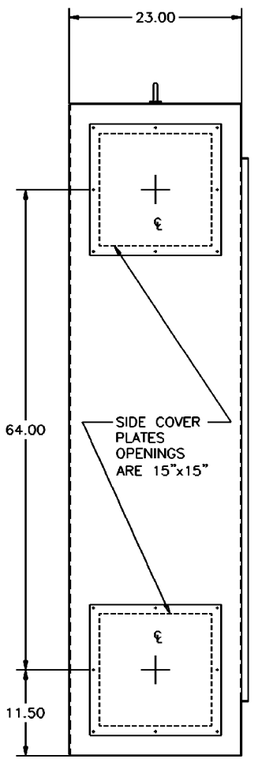


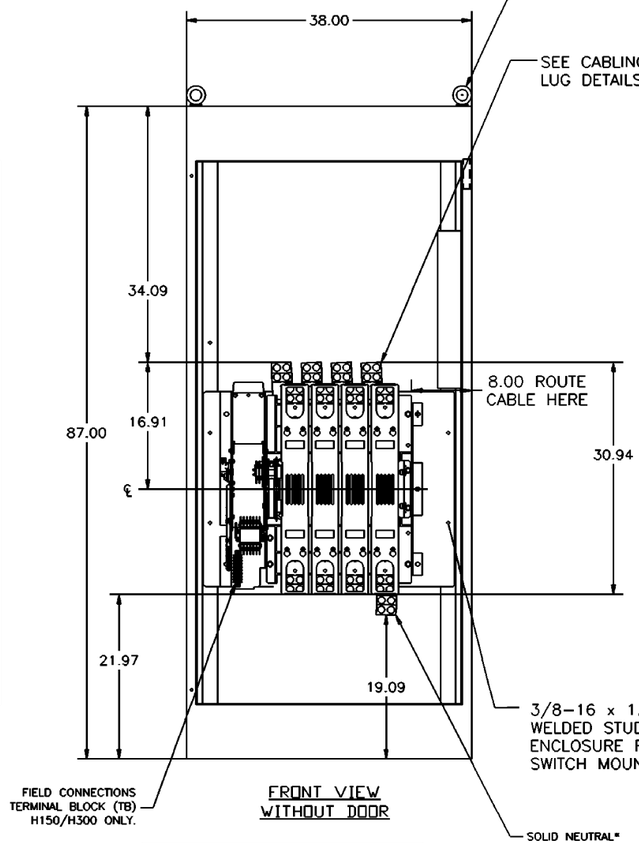


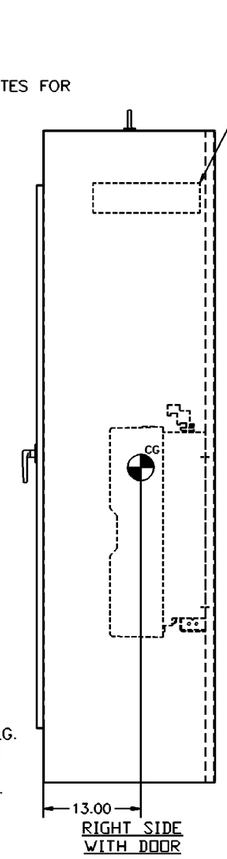


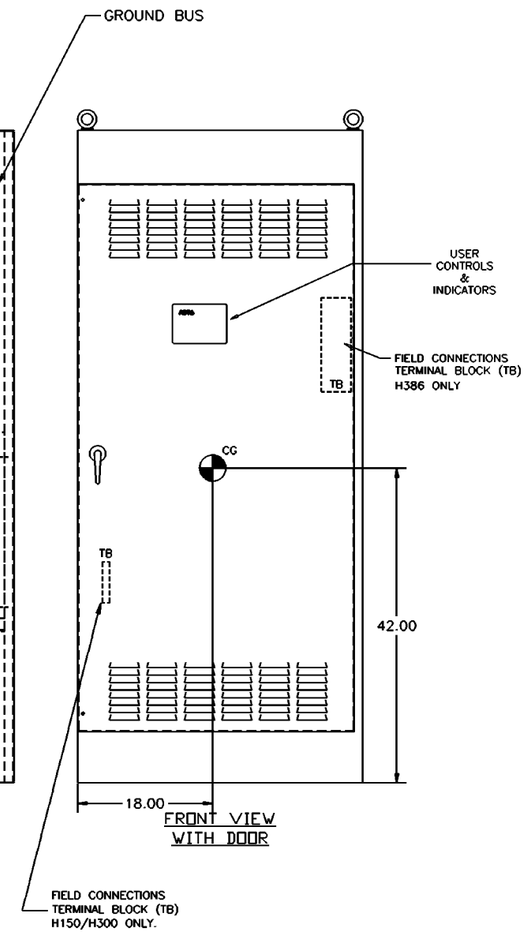


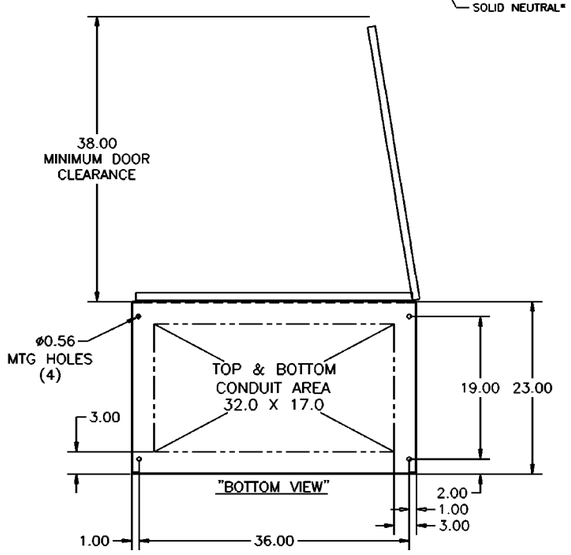


## GENERAL NOTES

1. TYPE 1 ENCLOSURE. FREE STANDING. FLOOR MOUNTED. 12 GAUGE FORMED FRAME CONSTRUCTION.
2. NEC STANDARD GAUGE PAN TYPE DOOR WITH LOCKABLE HANDLE.
3. FINISH: ASA 61 GRAY, POLYESTER POWDER STANDARD. OTHER ANSI COLORS AVAILABLE CONSULT FACTORY UL RECOGNIZED.
4. RECOMMENDED CLEARANCES:
   FRONT: 38 INCHES
5. THE STANDARD SWITCH CONFIGURATION IS FOR TOP LUGS EMERGENCY AND LOAD AND BOTTOM LUGS NORMAL.
6. NEUTRAL CONFIGURATIONS:
   H300–A FULL RATED SOLID (COPPER BUS) NEUTRAL CONNECTION FOR EACH SOURCE AND THE LOAD IS PROVIDED STANDARD. OPTIONALLY A SWITCHED NEUTRAL POLE MAY BE PROVIDED AS SPECIFIED BY THE CATALOG NO.
   (B) INDICATES A SWITCHED NEUTRAL POLE.

   H386–AN OPTIONAL FULL RATED NEUTRAL CONNECTION FOR EACH SOURCE AND THE LOAD MAY BE PROVIDED. WHEN EQUIPPED IT IS IN ONE OF THE FOLLOWING FORMATS AS SPECIFIED BY THE CATALOG NO. NEUTRAL TYPE;
   A. SOLID (COPPER BUS) NEUTRAL
   B. SWITCHED NEUTRAL POLE
7. NO KNOCKOUTS ARE PROVIDED.

## CABLING NOTES

1. ALL SIZES SUPPLIED STANDARD WITH MECHANICAL (SCREW TYPE) LUGS. (SEE AMP SIZE BELOW)
   A. LUG MATERIAL: ALUMINUM ALLOY 6061–T6 WITH ELECTRO TIN PLATED FINISH.
   B. SCREW MATERIAL: ALUMINUM ALLOY 6262–T9 WITH ELECTRO TIN PLATED FINISH.
   C. UL LISTED, CSA CERTIFIED.
   D. LUG SCREW TIGHTENING TORQUE PER UL 486B: 19 FT–LBS.
   E. SUITABLE WIRE BENDING SPACE IS PROVIDED. (SEE AMP SIZE BELOW)
2. OPTIONAL COPPER CRIMP LUGS MAY BE SUPPLIED. (SEE AMP SIZE BELOW)
   A. LUG MATERIAL: HIGH CONDUCTIVITY WROUGHT COPPER FINISH, ELECTRO TIN PLATED.
   B. UL LISTED, CSA CERTIFIED.
   C. LUG MOUNTING HARDWARE TIGHTENING TORQUE: (REFER TO WITHSTAND CURRENT RATING LABEL PROVIDED ON EACH TRANSFER SWITCH).
   D. SUITABLE WIRE BENDING SPACE IS PROVIDED. (SEE AMP SIZE BELOW)
3. CONSULT FACTORY FOR OTHER TERMINATION REQUIREMENTS.

## NOTES 1200 AMP SWITCHES

1. SUPPLIED WITH STANDARD MECHANICAL (SCREW TYPE) LUGS ON THE NORMAL, EMERGENCY & LOAD BUS STABS. ONE (1) LUG PER PHASE AND NEUTRAL EACH SUITABLE FOR CONNECTION OF FOUR (4) 1/0 –750MCM CU/AL CABLE (SEE NOTE "E" BELOW).

   E. SUITABLE WIRE BENDING SPACE IS PROVIDED FOR UP TO FOUR (4) 750MCM CABLES PER TERMINAL PER TABLE 373–6(b) OF NFPA 70 OF THE NEC.

   *FOR SOLID NEUTRAL REFER TO TABLE 373–6(b) OF NFPA 70 OF THE NEC. FOR WIRE BENDING SPACE FOR UP TO FOUR (4) 600MCM CALBES PER TERMINAL.

2. OPTIONAL COPPER CRIMP LUGS MAY BE SUPPLIED. UP TO FOUR (4) TWO HOLE, LONG BARREL CU CRIMP LUGS RATED FOR UP TO 600MCM. (REFER TO CRIMP LUG INSTALLATION DATA PROVIDED WITH UNIT FOR FULL INSTALLATION DETAILS).

   D. SUITABLE WIRE BENDING SPACE IS PROVIDED FOR UP TO FOUR (4) 600MCM CABLES PER TERMINAL PER TABLE 373–6(b) OF NFPA 70 OF THE NEC.

| CHANGE LETTER | ECN NO. | BY | APP. | DATE |
|---|---|---|---|---|
| B | 158984 SEE ECN | BK | BK | 10/01 |
| A | 157990 SEE ECN | BVH | WK | 7/23/01 |
| – | 157637 ISSUED | BVH | WK | 5/14/01 |

PROJECT NAME:

COMPOSITE OUTLINE
H150–H300–H386 SERIES TS "H"
1200 AMP TYPE 1

THIRD ANGLE PROJECTION

SUBSIDIARY DISTRIBUTION: AE, AH, AM, AJ, AL, CH, AV, AA, PS, AR, AG, AP, AC, AS

| | BY | DATE |
|---|---|---|
| DRAWN BY | DJB | 5/14/01 |
| CHECKED | | |
| DRAFTING APPROVAL | WK | 5/14/01 |
| FINAL APPROVAL | | |

MANUFACTURING TOLERANCES TO BE IN ACCORDANCE WITH ASCO PROCEDURE MP–I–003. FOR PLASTIC PARTS SEE MP–I–055

ASSEM. REF. NO.

PROPERTY OF ASCO POWER TECHNOLOGIES. USE PERMITTED FOR OUR WORK ONLY. ALL RIGHTS OF DESIGN OR INNOVATION ARE RESERVED.

ASCO® ASCO POWER TECHNOLOGIES, L.P. FLORHAM PARK, NEW JERSEY 07932 U.S.A.

COMPUTER GENERATED DRAWING

SCALE: ACAD | FILE: AO

SIZE: | DWG. NO.: DS713209

CHANGE LETTER: B | ECN NO.: 158984 | SHEET